STRATA ACOUSTIC

- The EOS Light Strata is a scalable LED strip matrix system designed to deliver uniform, full-color illumination across large surface areas. Built on an RGBW architecture, Strata combines a full RGB color spectrum with a dedicated white channel – making it equally capable of vibrant color displays and precise tunable white lighting.
- Available in three configurations (Static, Color Tunable, and RGBW), it adapts to virtually any project requirement, from backlit ceilings and wall features in hotels and casinos, to illuminated storefronts, light boxes, and custom residential installations.
- It's available with an optional white acoustic backer for softer, more even diffusion and added sound absorption in interior installations.

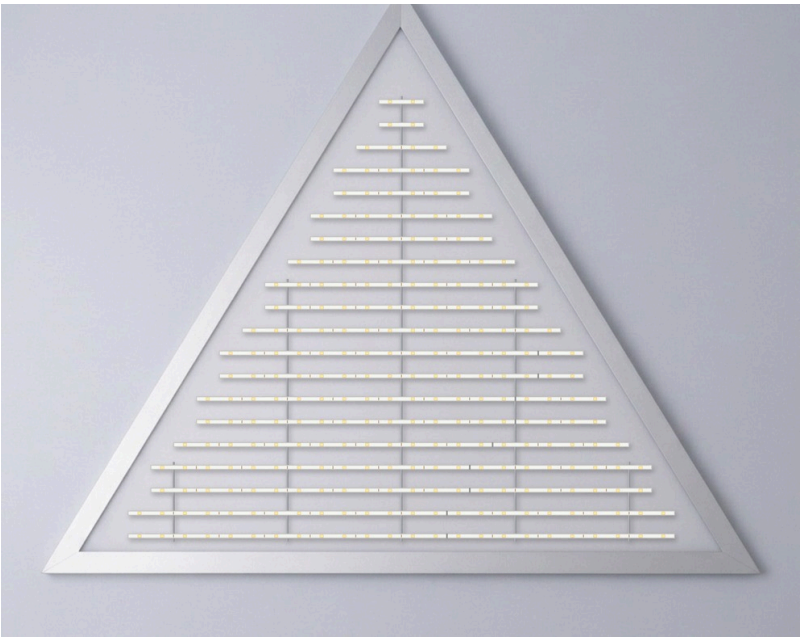

FEATURES

- RGBW color mixing for vibrant color or precise tunable white output.
- Three configurations available: Static, Color Tunable, and RGBW.
- Scalable matrix system for seamless large-format installations.
- DMX and 0-10V/MLV/ELV compatible for versatile control options.
- 24V DC input, compatible with standard EOS drivers and controllers.

APPLICATIONS

HOSPITALITY | COMMERCIAL INTERIOR | BARS | RESTAURANT | RETAIL | HEALTHCARE

122 W.26th St., Suite 503, New York, NY 10001 | Tel:310.616.5070 | Fax:310.616.5056 | eoslight.com

GENERAL SPECIFICATIONS

LED STRIP MATRIX SYSTEM
The Strata Light Engine is a backlit matrix system consisting of evenly spaced LED strips to be used as a back lighting.

DIMENSIONS PER UNIT
Up to 1220mm x 2440mm
48″ x 96″
For bigger installations, the units can be placed next to each other.

WATTAGE
Static: 10W/sqft
Tunable: 14W/sqft
RGBW: 6W/sqft

DIMMABLE
The system is dimmable to <10% when matched with Dimmable Power Supplies

OPERATING TEMPERATURE RANGE
-13°F to 158°F

EFFICACY
150–200 lm/W

POWER OPTIONS
24VDC Standard

STRIP LENGTH
980mm (38.5″) per strip

LED COUNT PER STRIP
Static: 14 LEDs
Tunable: 21 LEDs
RGBW: 28 LEDs

STRIP SPACING
Static & Tunable: 70mm apart
RGBW: 50mm apart

CUTTABLE SECTIONS
Static & Tunable: 140mm increments
RGBW: 70mm increments

LUMINOUS OUTPUT
200–1800 lm/sq. ft.

BACKLIGHTING DEPTH
Minimum 3" (76mm) from the LED strips to the face material, for any backlit material.

WEIGHT
1.2 lbs/sq. ft.

CRI
90+

WIRE GAUGE
20GA Wiring for White Panels, 24GA for Color

DRIVER INPUT VOLTAGE
100V TO 480V

LIFETIME
Over 50,000 hours = Nearly 12 years based on 12 hours a day usage.
Once installed, the Strata System is virtually maintenance free.

WARRANTY
5 years warranty according to the EOS Policy available **here.**

OPTIONAL SPECIFICATIONS

COMPATIBLE POWER SUPPLIES
0-10V/MLV/ELV dimming | DMX
Electronic low voltage (ELV)
RF Dimmable Plug In
Inline Dimmable Plug-In

COLOR TEMPERATURES
Static White
Tunable White (full range)
RGBW – RGB/RGBW full color spectrum available

ACOUSTIC BACKER
12mm (0.47″) white Polyester fiber acoustic board felt panel
NRC 0.70 (acoustic rating)
Adhesive-mounted to frame – no wattage or wiring impact
Panel size: 2440 × 1220 mm (96.06″ × 48.03″)

APPROVALS AND CERTIFICATIONS
The System is UL listed for Architectural applications and UL recognized for signage. All power supplies are UL / ETL listed.

c UL us
LISTED
LOW VOLTAGE LUMINAIRE
E480527

c UL us
E467626

CE

RoHS

BACKLIGHTING DEPTH

STRATA ACOUSTIC · SIDE VIEW

MINIMUM 3" (76 MM)

from the LED strips to the face material, for any backlit material.

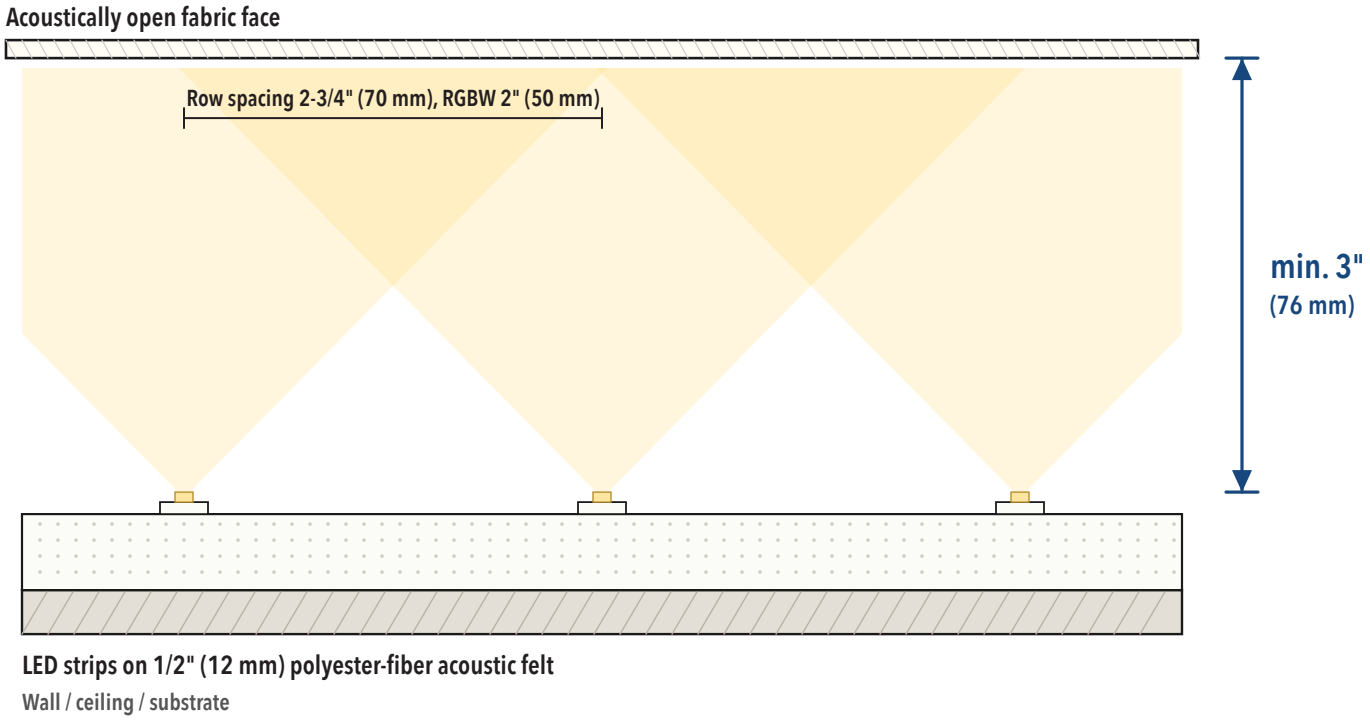

WHY 3"

The strips sit 2-3/4" (70 mm) apart. At 3" the light from each row overlaps the next, so the face glows evenly with no stripes or hot spots.

KEEP IT ACOUSTIC

Use an acoustically open fabric face so sound reaches the felt (NRC 0.70). Measure the 3" from the LED strips, not from the substrate: the felt adds 1/2" (12 mm).

BEFORE YOU ORDER

Always mock up the project with a sample of the face material. Your EOS representative will confirm the right depth.

EOS BACKLIGHTING DEPTH GUIDE Compare Strata with LightSlab, LightPaper and LightPanels: **eoslight.com/guides**

SIZES & SHAPES

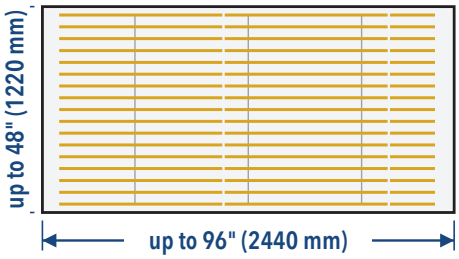

STANDARD RECTANGLE

UP TO 48" × 96"

(1220 × 2440 mm)

Any rectangle up to this size is standard. For larger walls and ceilings, panels are placed side by side.

CUSTOM SHAPES

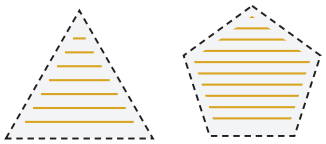

Triangles and pentagons are examples only. Other custom shapes are made to order.

SPECIFICATION FORM

NAME: _____ PROJECT NAME: _____ ADDRESS: _____

PHONE: _____ PROJECT LOCATION: _____ CITY: _____

EMAIL: _____ ANTICIPATED DELIVERY DATE: _____ ZIP CODE: _____

COMPANY NAME: _____ PROJECT SPECIFIER: _____ RUSH PROJECT: Yes ☐ No ☐

QTY	MATERIAL	VOLTAGE	DIMENSIONS TOP	DIMENSIONS SIDES	COLOR TEMP	LED POWER	CORD LENGTH	CORD COLOR	POWER SUPPLY	BACKER
3	STR	24V	48	50	WT	ST	CC9	BC	ELV	WB
	A	B	C		D	E	F	G	H	I

A: FIXTURE TYPE

STR - Strata

B: VOLTAGE

24V - 24V (Standard)

C: DIMENSIONS

(Generated by Client)
C1- Top Dimension
C2- Side Dimension

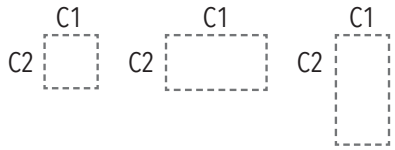

D: COLOR TEMPERATURE

WT - White Static only
1800 - 1800K **4000** - 4000 K
2400 - 2400 K **5000** - 5000 K
2700 - 2700 K **6000** - 6000 K
3000 - 3000 K **6500** - 6500 K
3500 - 3500 K **7500** - 7500 K
RGBA - RGBA **RGB** - RGB
UV - Ultraviolet **RGBW** - RGBW
TW - Tunable White

E: LED POWER

ST - Static 10W/sqft
TN - Tunable 14W/sqft
RGBW - RGBW 6W/sqft

F: POWER CORD LENGTH

SC - Standard -9.8 ft.
CC - Custom Length _____ ft

G: POWER CORD COLOR

BC - Black
WT - White

H: POWER SUPPLY INFO

010V - 010V Dimmable Hardwire
ELV - Electronic Low Voltage Dimmable Hardwire
DMX - DMX /DALI
PI - Plug In, DC Jack
DPI - Dimmable Plug in w/ remote
HW - Non-Dimmable Hardwired

I: BACKER

NB - No Backer (standard)
WB – White Acoustic Backer
MB – Metal Backer

122 W.26th St., Suite 503, New York, NY 10001 | Tel:310.616.5070 | Fax:310.616.5056 | eoslight.com

PHOTOMETRY

NAME	STR-24-60x36-SP-6000
NOMINAL POWER(W)	24.4
RATED VOLTAGE(V)	24
NOMINAL FLUX(lm)	3180.14
SIZE	60″ x 36″
COLOR	6000K

LUMINOUS INTENSITY DISTRIBUTION DIAGRAM

STRATA, 60″ x 36″,
24V, Standard Power, 6000K

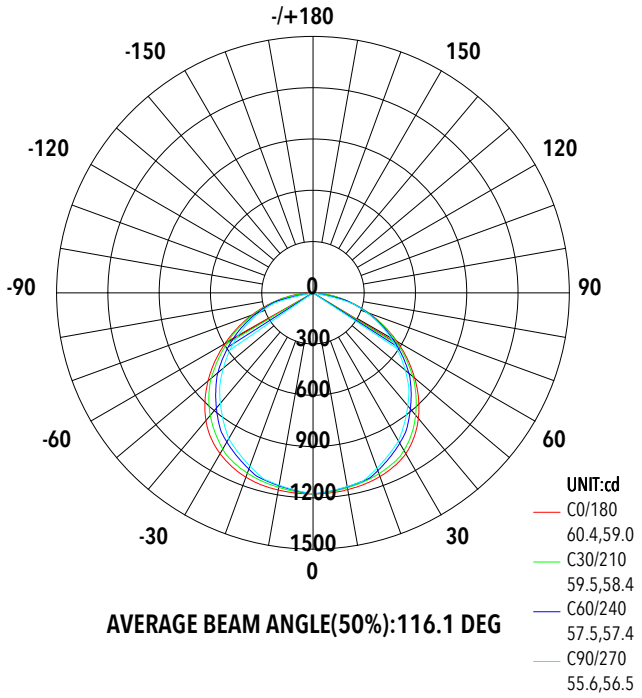

AVERAGE BEAM ANGLE(50%):116.1 DEG

PHOTOMETRY

NAME	STR-24-60x36-SP-6000
NOMINAL POWER(W)	24.4
RATED VOLTAGE(V)	24
NOMINAL FLUX(lm)	3180.14
SIZE	60″ x 36″
COLOR	6000K

LUMINOUS DISTRIBUTION INTENSITY DATA

C (DEG) / γ (DEG)	0	45	90	135	180	225	270	315
0	1177	1177	1177	1177	1177	1177	1177	1177
5	1175	1167	1164	1167	1176	1164	1160	1164
10	1169	1155	1151	1156	1171	1150	1143	1149
15	1160	1141	1139	1144	1164	1135	1126	1131
20	1144	1125	1093	1130	1148	1117	1079	1113
25	1121	1083	1047	1091	1123	1077	1033	1073
30	1087	1034	1001	1044	1087	1027	987	1025
35	1031	980	932	992	1040	974	915	973
40	959	921	863	931	975	914	844	909
45	873	835	794	845	895	835	772	818
50	777	745	704	757	802	750	685	726
55	674	653	615	668	702	661	598	633
60	566	547	526	566	597	560	511	532
65	456	444	429	466	489	461	419	432
70	347	341	332	365	381	362	328	333
75	241	238	236	263	276	263	236	234
80	138	121	0	142	174	144	0	121
85	44.1	0	0	0	77.6	0	0	0
90	0.44	0	0	0	0.5	0	0	0

C Installation & Wiring: Strata Acoustic

1/2" (12 mm) white polyester-fiber felt backer · NRC 0.70

1 Test first

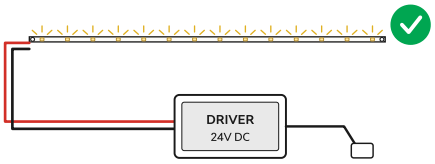

- Connect every strip to the driver and check all LEDs light evenly **before** mounting.
- Red = +, Black = −. Power OFF to connect.

2 Plan the layout

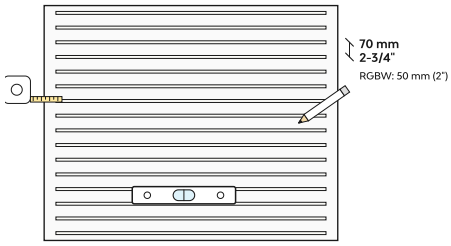

- Rows 70 mm (2-3/4") apart. RGBW 50 mm (2").
- Level and mark each row. Edge rows 35 mm (1-3/8") in.

3 Cut to length

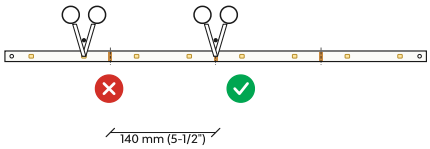

- Cut only on the marks: every 140 mm (5-1/2"). RGBW 70 mm (2-3/4").
- Every cut piece needs its own + / − feed.

4 Install the felt, then fasten the strips through it

Felt panels (96" × 48") are adhesive-mounted. Butt tight, no gaps.

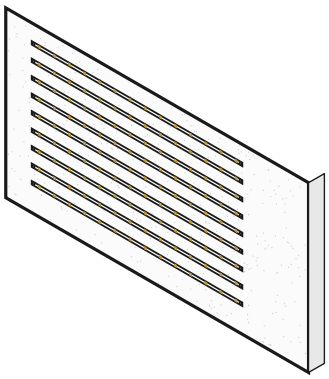

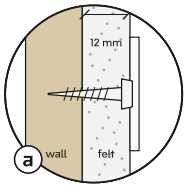

- Screw through the 3/16" (4.8 mm) hole at each strip end, through the felt and into the wall.
- **a** M4 or #8 stainless pan-head, **1-1/4" minimum** (1/2" felt + 3/4" into the wall). Drywall: anchors or studs.
- Snug only. Don't crush the felt.
- The felt doesn't change wattage or wiring.

Face material: acoustically open fabric only

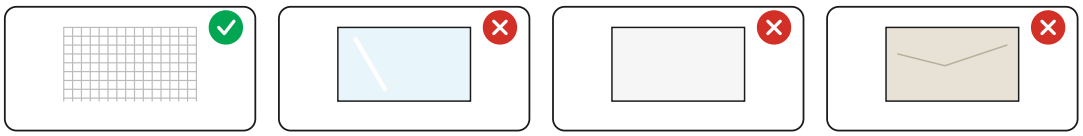

Fabric (acoustically open) | Glass | Acrylic | Stone / solid

C Installation & Wiring: Strata Acoustic

1/2" (12 mm) white polyester-fiber felt backer · NRC 0.70

5 Wire the rows

Vertical connector wires run between the rows and link them in parallel.

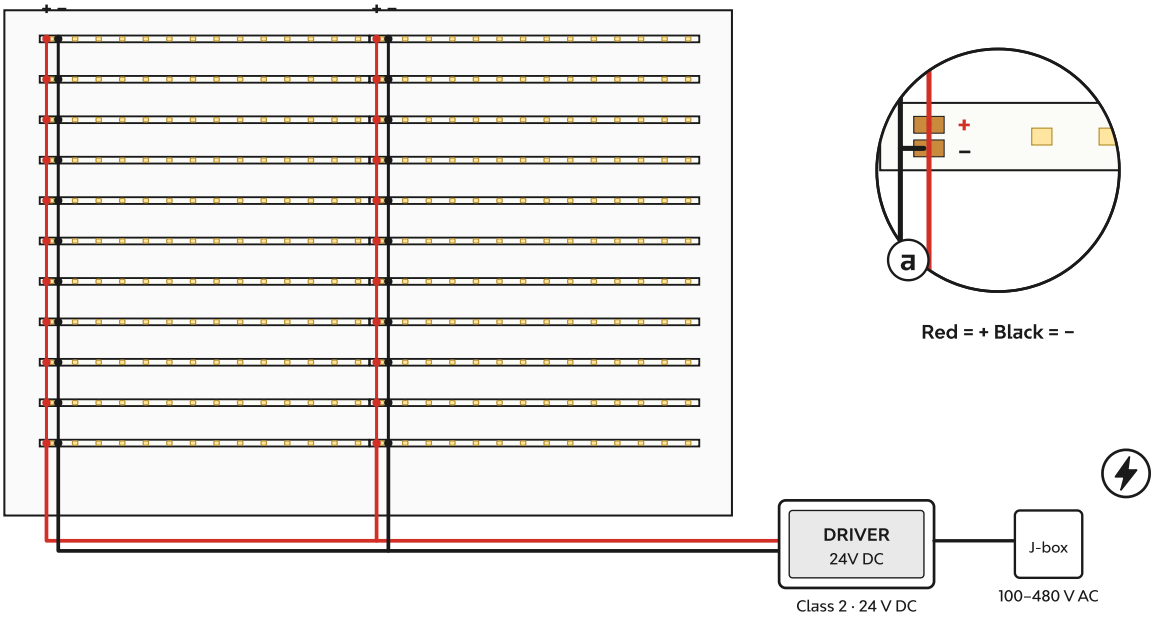

- Connect every row + to + (red) and – to – (black). Never cross polarity.
- 20 AWG for white systems, 24 AWG for color (RGBW).
- Load each driver to no more than 80% of its rating (Static 10 W/sq ft, Tunable 14, RGBW 6).
- The 100–480 V AC connection to the driver is made in a junction box by a licensed electrician.

6 Power on, then install the face material

Confirm every row lights evenly before closing up.

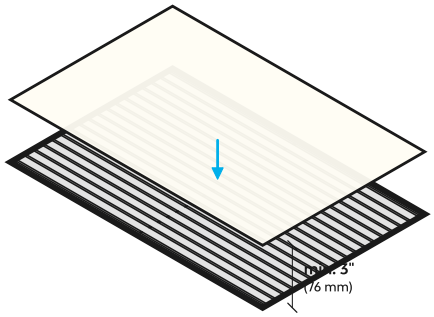

- **Backlighting depth: minimum 3" (76 mm)** between the LED strips and the face material, for any material.
- Use only Class 2, 24 V DC drivers supplied by EOS. Power OFF at the breaker before installing or wiring.
- Install per the NEC and local codes by a qualified electrician.
- Full instructions, delivery inspection and warranty: **Strata Installation & Wiring Guide** at eoslight.com.